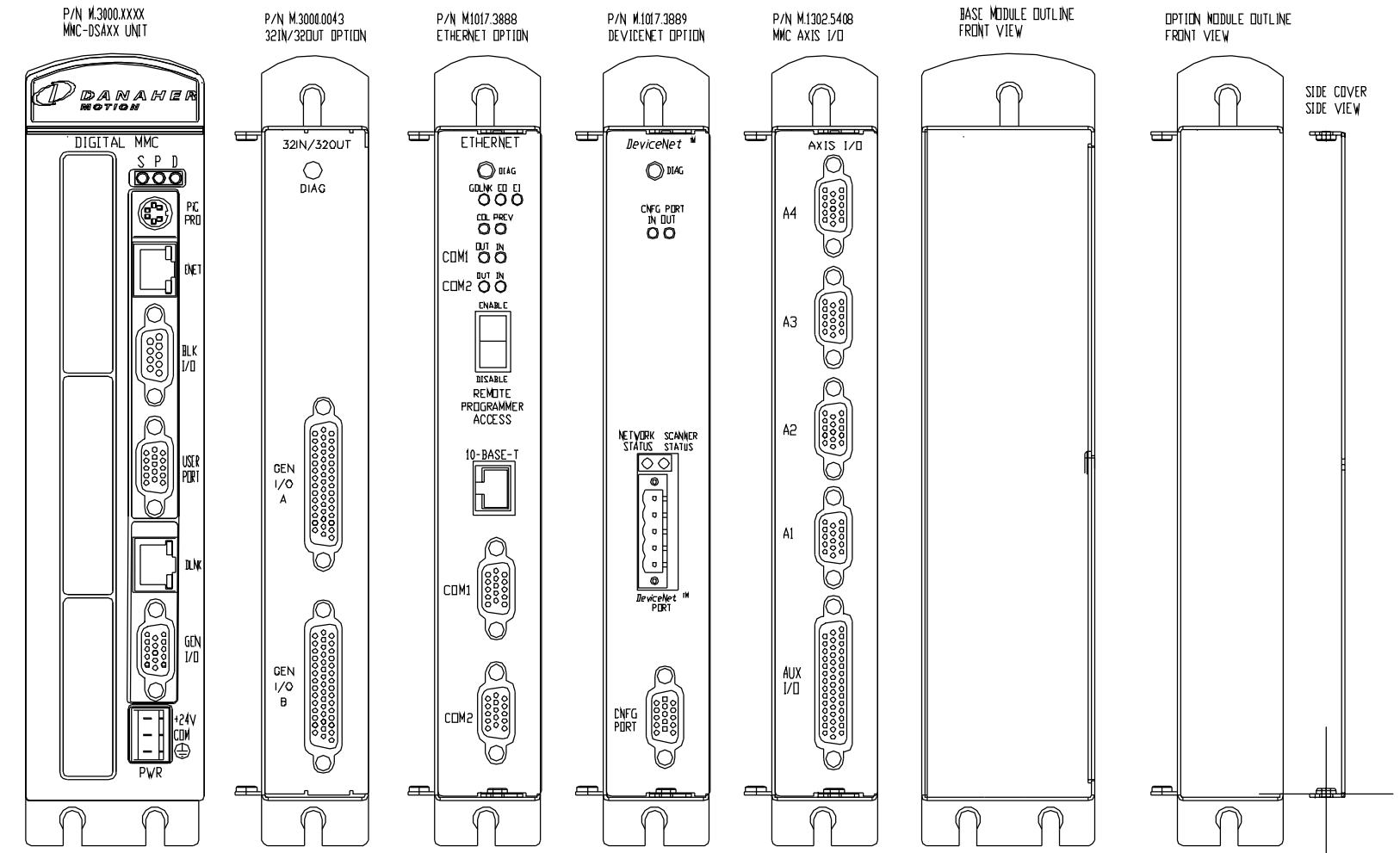

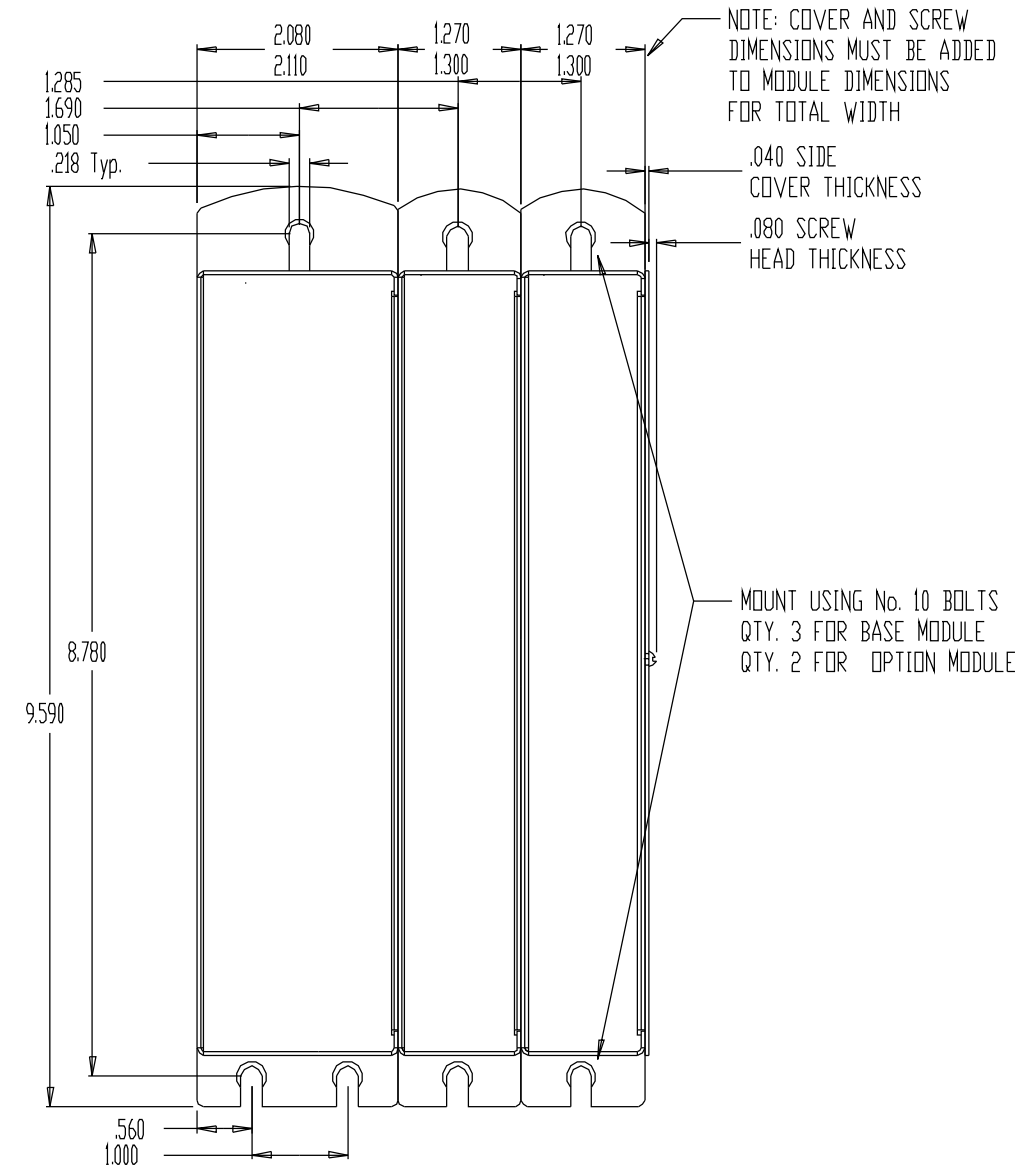

MOUNTING DIMENSION

MAY BE MOUNTED NEXT TO NON-HEAT GENERATING CONPONENTS. SEE INSTRUCTIONS IN MANUAL FOR MOUNTING NEXT TO HEAT GENERATING COMPONENTS.

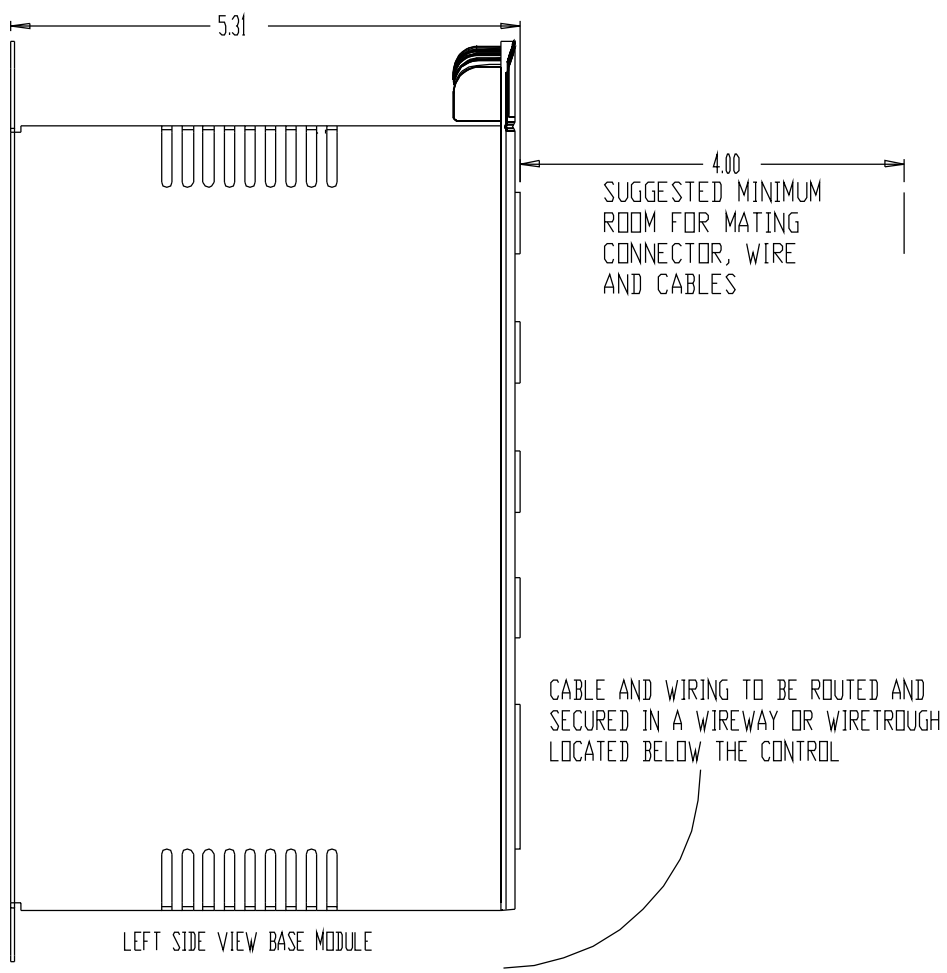

LEFT SIDE VIEW BASE MODULE

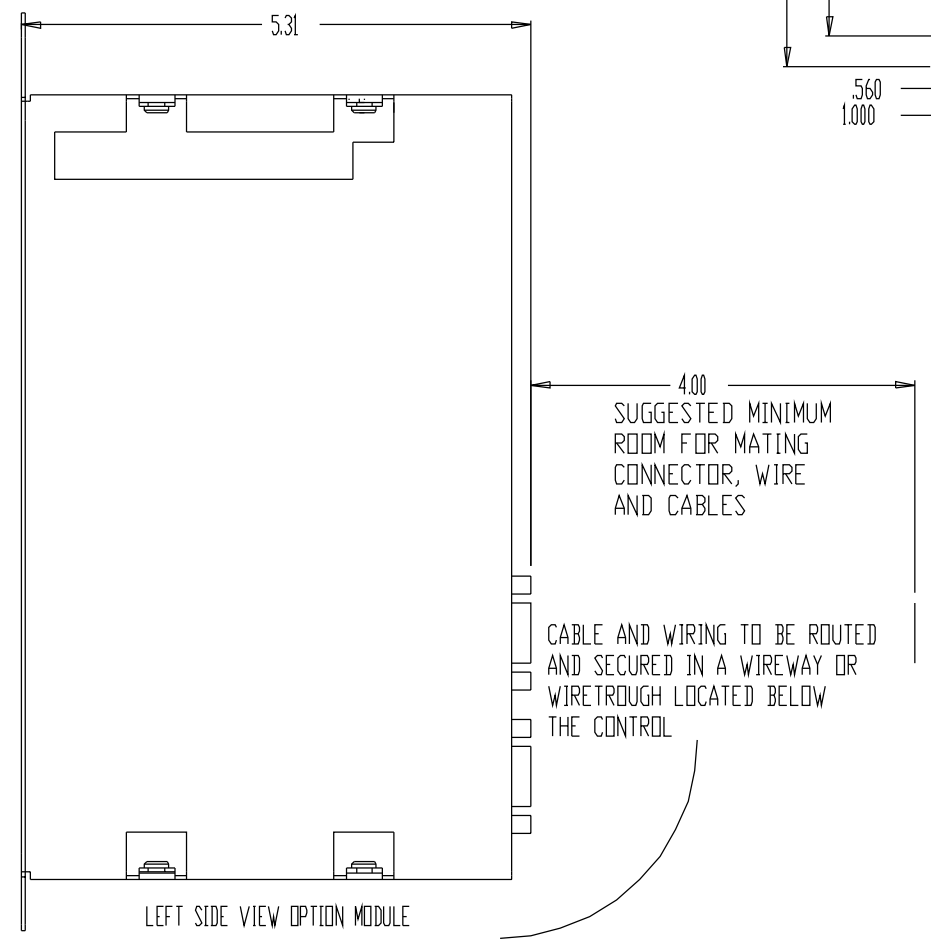

LEFT SIDE VIEW OPTION MODULE

SCALE = 1:1

NOTICE: This drawing or material contains proprietary information of Danaher Motion is submitted in confidence on condition that it will not be copied or otherwise reproduced NR use used only for your information and will not be used or disclosed to anyone except as authorized by specific written consent of Danaher Motion.

DANAHER MOTION
FOND DU LAC, WISCONSIN, U.S.A.

DRAWN BY	MACH.	DATE 11/11/08
CHECKED BY	MATERIAL	SHEET 1 OF 1

NO.	DATE	REVISION

DRAWING NAME: MMC-DSA MOUNTING

DRAWING NUMBER: MD.MMCDSAMTG

GLD CODE