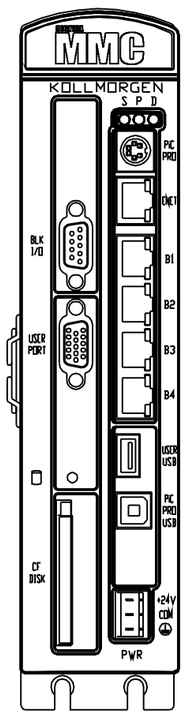

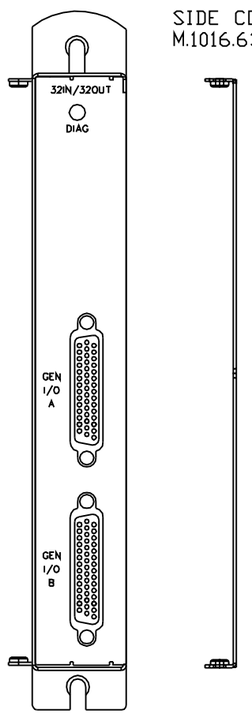

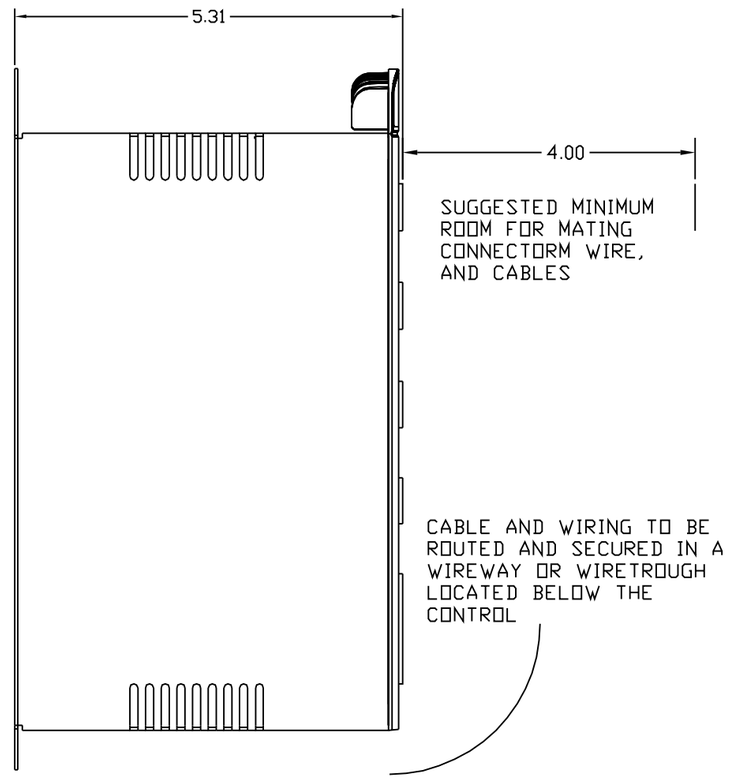

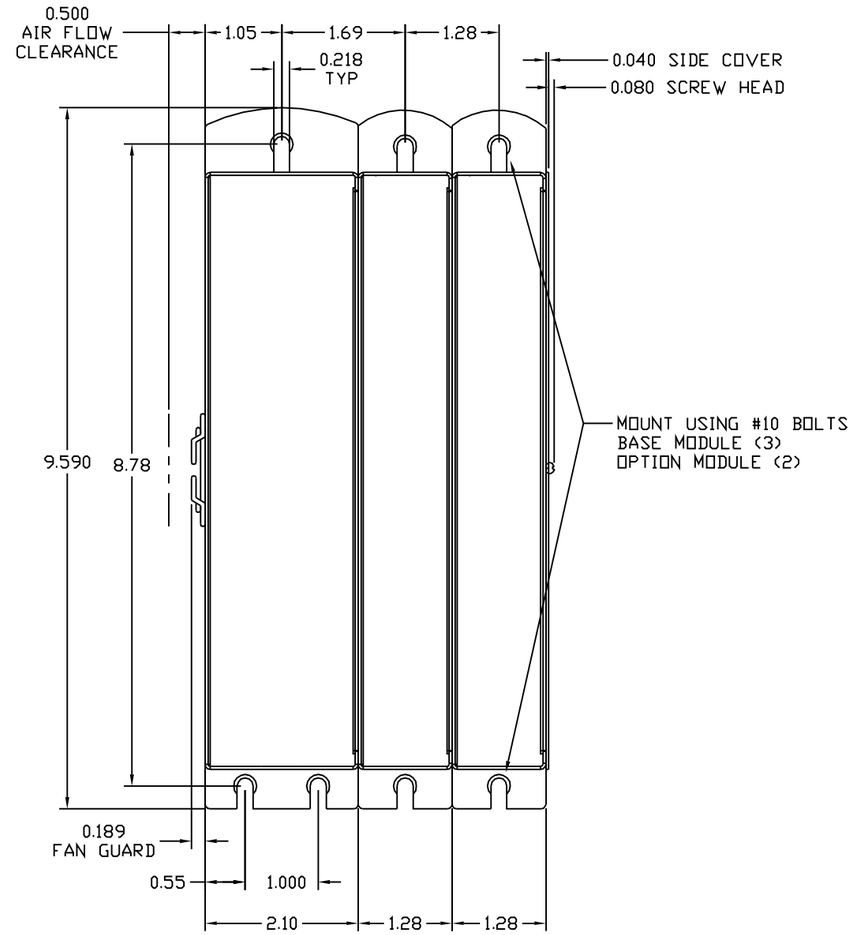

THIS DRAWING IS FOR REFERENCE, SEE MANUAL FOR COMPLETE INSTALLATION INSTRUCTIONS AND GUIDELINES.

NO.	DATE	REVISION

NOTICE: This drawing or material contains proprietary information of G & L Motion Control Inc., is submitted in confidence on condition that it will not be copied or otherwise reproduced, will be used only for your information, and will not be used or disclosed to anyone except as authorized by specific written consent of G & L Motion Control Inc.

DO NOT SCALE DRAWING

DR BY
CHK BY
APPD BY

DRAWING NAME
DIGITAL MMC-Dx/3210 OPTION

G & L MOTION CONTROL
672 South Military Road
Fond du Lac, Wisconsin 54935 U.S.A.

REF
MACH
DATE
MATL
SHEET OF
DRAWING NUMBER